KFC-241 Series



Industrial Compact 10/100BASE-TX to 100BASE-FX Media Converters

Product Highlights:

- Compact and robust
- Auto-crossover
- Auto-negotiation
- Smallest latency
- Far End Fault support
- Link Fault Pass Through
- Wide range of DC IN voltage
- DC 110V support
- Industrial rated

Key Features:

- Support full wire speed conversion for 10/100Mbps speed and media types
- Support auto-negotiation 10/100Mbps or forced mode on the copper port
- Auto MDI/MDI-X crossover function on the copper port
- Provide Link Fault Pass Through function
- Transparent conversion to 802.1Q VLAN tagged packets
- Provides Far End Fault function on FX (fiber) port
- The optimal latency for 100M to 100M conversion
- Two power interface types: screw terminal block and DC Jack
- Low power consumption
- DC power input options: +4.5 ~ +50VDC, 110VDC
- Supports DIN rail mounting and optional screwed plane mounting
- Compact design for easy installation in enclosure and chassis
- Supports wide operating temperature range
- Industrial-rated Emission and Immunity performance

Specifications:

Conversion	10BASE-T to 100BASE-FX, 100BASE-TX to 100BASE-FX 10/100BASE-T Auto to 100BASE-FX
Conversion Methods	Cut-through for 100M to 100M with the smallest latency Store-and-forward for 10M to 100M conversion Auto mode-switching
Copper Port	IEEE 802.3 10Base-T, IEEE 802.3u 100Base-TX Shielded RJ-45 jacks with Auto MDI/MDI-X detection Auto-negotiation for speed and duplex
Fiber Port (FX)	IEEE 802.3u 100Base-FX compliant Forced 100Mbps, Full duplex Far end fault Function
Network Cables	10/100Mbps copper: Cat.5 up to 100m, 100BASE-FX: 62.5/125µm, 50/125µm MM fiber, 9/125µm SM fiber
Packet Size	Up to 1536 bytes for 10M-to-100M conversion No packet size limit for 100M-to-100M conversion
DC IN Voltage	KFC-241-L: +4.5 ~ +50VDC KFC-241-H: +110VDC with polarity protection
DC IN Connectors	Industrial Terminal Block 3P: DC+, DC-, PE DC Jack (KFC-241-L)
Power Consumption	KFC-241-L: 1.6W@+7.5V, 1.6W@+12V, 2W@+48V KFC-241-H: 2.9W@110VDC
Housing	Enclosed metal with no fan

120525

REAL OPTIC
Importado y Distribuido por Real Optic Limitada
Avenida Ventisquero #1204 Modulo 18 - Renca, Chile - ventas@realoptic.com - www.realoptic.com -WP:+56996374501

Ordering Informations:

Model	DC IN	DC IN Voltage
KFC-241-L-x	TB-3P, DC Jack	+4.5 ~ 50VDC
KFC-241-H-x	TB-3P	+110VDC

KFC-241-L-x KFC-241-H-x	Fiber Mode	Connector	Ref. Distance
-T	MM	Duplex ST	2km
-C	MM	Duplex SC	2km
-SL2	SM	Duplex SC	20km
-SL3	SM	Duplex SC	30km
-SL6	SM	Duplex SC	60km
-W3520	SM	BiDi SC	20km
-W5320	SM	BiDi SC	20km

MM: Multimode Fiber
SM: Single Mode Fiber
Ref. Distance: Reference connection distance

EMI EMS Safety Environmental Tests:

Test	Standard	Specifications
FCC/EMI	FCC Rule Part 15	Class A
CE/EMC/EMI	EN55022, CISPR 22	Class A
CE/EMC/Harmonic	EN 61000-3-2	< 75 W
CE/EMC/VFF	EN 61000-3-3	Clause 5
CE/EMC/EMS	EN 55024	
ESD Test	IEC 61000-4-2	Contact: +/-6KV Air: +/-8KV
RS Test	IEC 61000-4-3	Strength: 10V/m
EFT/BURST	IEC 61000-4-4	DC IN: +/-1KV RJ-45: +/-0.5KV
Surge Immunity	IEC 61000-4-5	DC IN: +/-0.5KV RJ-45: +/-1KV
CS Test	IEC 61000-4-6	Level 3
Magnetic Field Imm.	IEC 61000-4-8	50Hz 100A/m
Voltage Dips Imm.	IEC 61000-4-11	Interruption: C Dips: B
Safety	EN 60950, IEC 60950	
Dielectric Voltage	IEEE 802.3	TP, 1500VAC/60sec.
Insulation Resistance	IEEE 802.3	TP, 500VDC/10Mohm
Cold Test	IEC 68-2-1 Test Ad	-30°C, 96hrs
Dry Heat Test	IEC 68-2-2 Test Bd	+70°C 40%RH 72hrs
Damp Heat Test	IEC 68-2-3	+60°C 90%RH 72hrs
Storage Test	IEC 68-2-48	-40°C 96hrs +85°C 40%RH 96hrs
Vibration Test	IEC 68-2-34	

FCC Part 15, Class A
CISPR 22 Class A

Dimension	KFC-241-L: 34 x 49 x 56mm (WxDxH) KFC-241-H: 45.5 x 49 x 56mm (WxDxH)
Mounting Support	DIN-Rail, Panel
Environment	Operating temperature: -30°C ~ 70°C (Main device) Storage temperature: -40°C ~ +85°C Relative Humidity: 10%~90% non-condensing
Certification	FCC Class A, CE mark Class A, LVD, TUV IEC 60950-1 safety, C-Tick

Fiber Optical Specifications:

Model	Connector	Fiber*1	Wavelength	Tx Power*2	Rx Sens.	Rx Max.
-T	Duplex ST	MMF	1310nm	-20 ~ -14dBm	-32dBm	-8dBm
-C	Duplex SC	MMF	1310nm	-20 ~ -14dBm	-31dBm	0dBm
-SL2	Duplex SC	SMF	1310nm	-15 ~ -8dBm	-30dBm	-7dBm
-SL3	Duplex SC	SMF	1310nm	-15 ~ -8dBm	-34dBm	0dBm
-SL6	Duplex SC	SMF	1310nm	-5 ~ 0dBm	-35dBm	0dBm
-W3520	BiDi SC	SMF	Tx 1310nm Rx 1550nm	-14 ~ -8dBm	-31dBm	0dBm
-W5320	BiDi SC	SMF	Tx 1550nm Rx 1310nm	-14 ~ -8dBm	-31dBm	0dBm

*1 MMF: Multimode fiber - 62.5/125 µm, 50/125 µm
SMF: Single Mode fiber - 9 /125 µm
*2 Data for 62.5/125µm MMF, 9 /125µm SMF

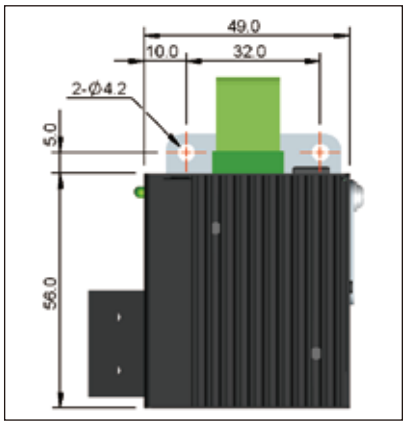

KFC-241-H with Panel mounting bracket

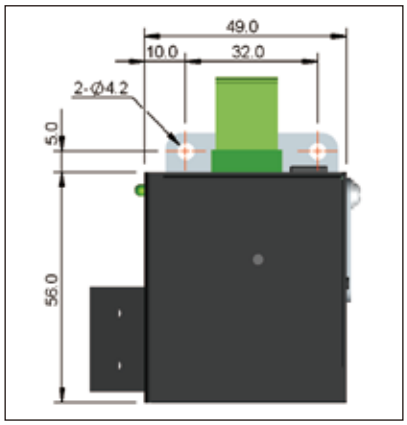

KFC-241-L with Panel mounting bracket

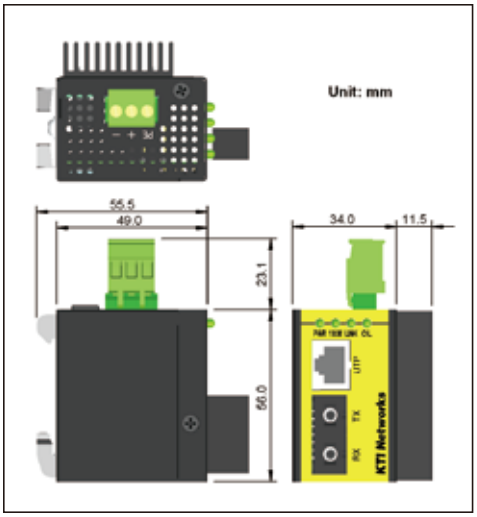

KFC-241-H with DIN-Rail bracket

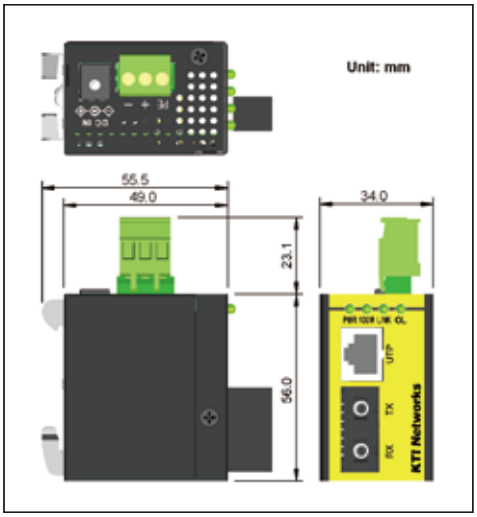

KFC-241-L with DIN-Rail bracket

120525

REAL OPTIC
Importado y Distribuido por Real Optic Limitada
Avenida Ventisquero #1204 Modulo 18 - Renca, Chile - ventas@realoptic.com - www.realoptic.com -WP:+56996374501